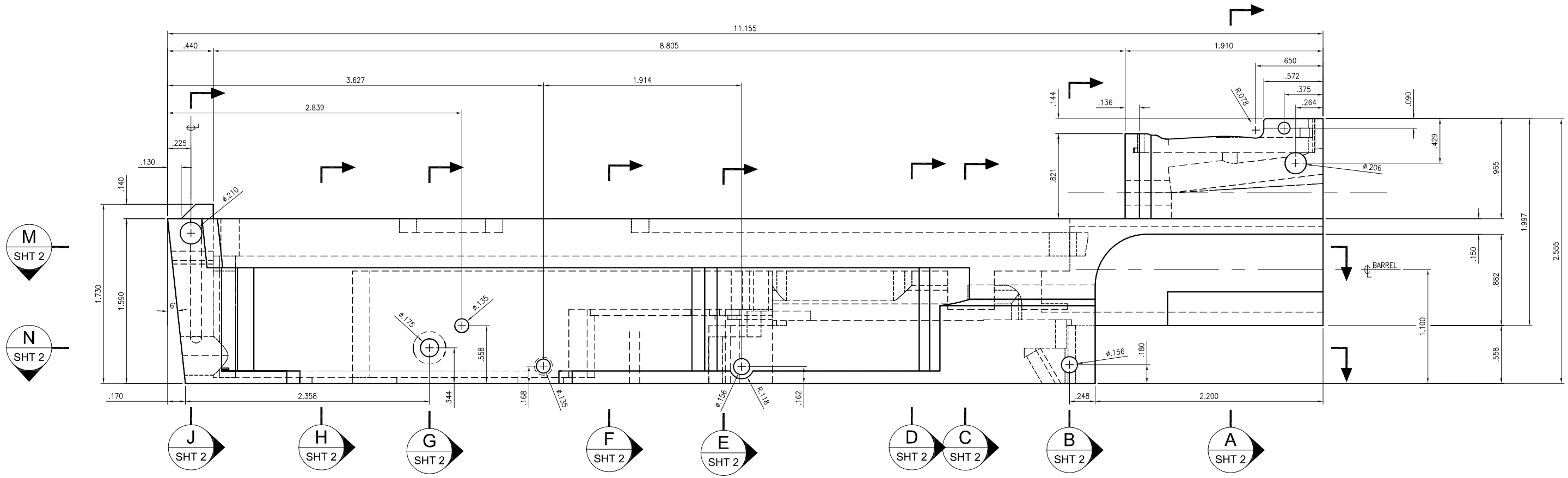

FRONT

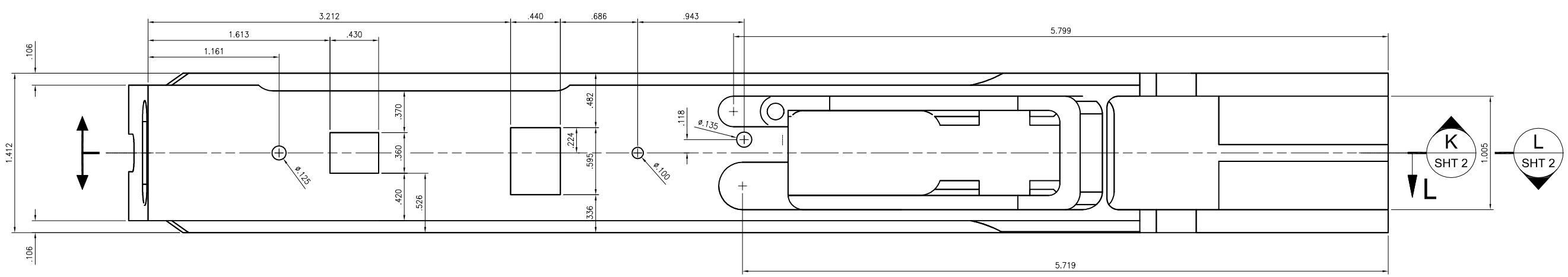

BOTTOM

NOTES

No	DFT	ENG	DATE	ISSUE / REVISION

	ENGINEER	DRAWN	DFT. CHECK	APPROVED
BY				
DATE				

VZ58 RECEIVER

GENERAL ARRANGEMENT

14 Jan 2007 14:00 | SHEET : | SCALE : HALF | PROJ.NO. | DWG. NO: | SHT 1 OF 5 | REV.

S:\CWD\gun\vz58\VZ58 autocad detail.dwg, 4/1/2008 1:10:18 PM, dpoteet